ANGLE BRACKET

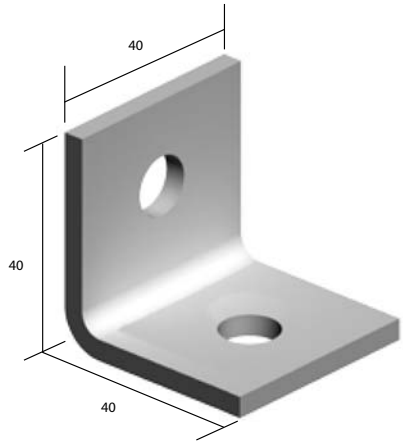

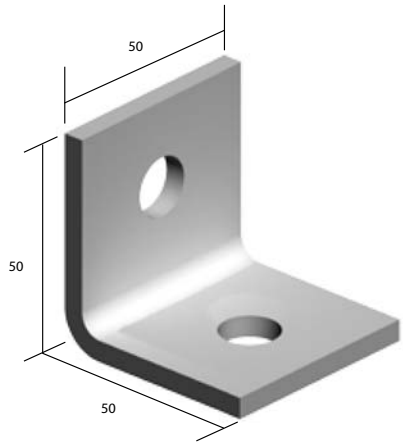

18 Ø HOLE

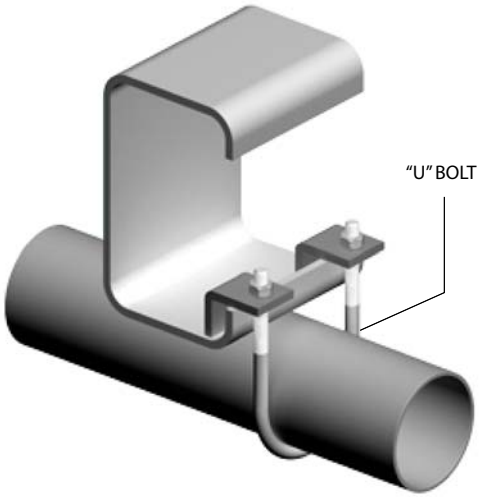

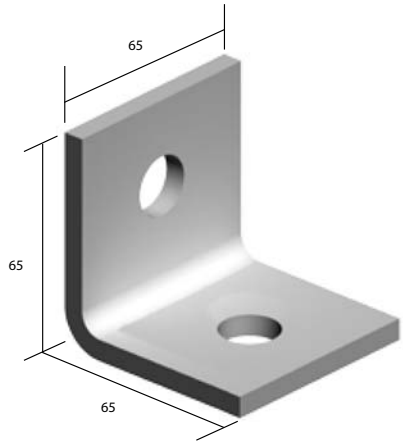

PART NO	Bolt Dia	Box Qty
IAB1400M06H	M6	200
IAB1400M10H	M10	200
IAB1400M12H	M12	100

ORDERING CODE

IMPRES ANGLE CLAMP ← **IAB1400** **M06** **H** → FINISH

H HOT DIP GAL

Bolt Diameter

NOTE: Non Standard finish are available upon request and are made-to-order. They cannot be returned once the order is processed.